& drivers, software documentations

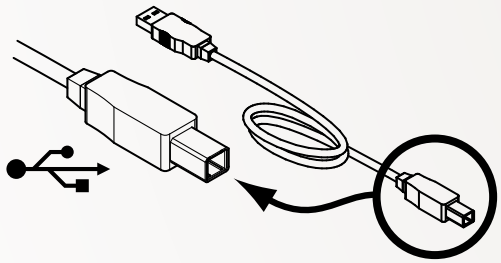

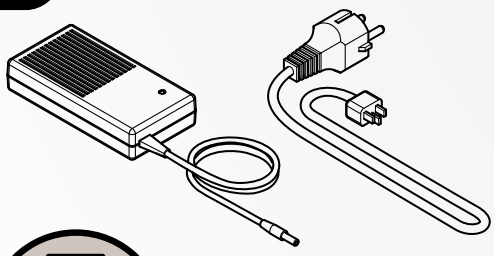

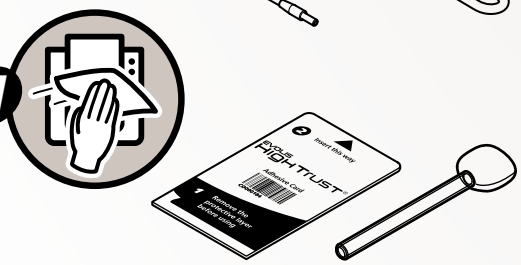

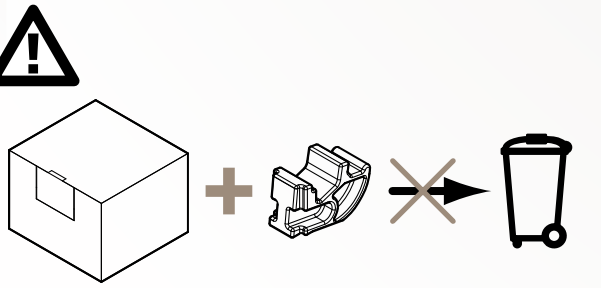

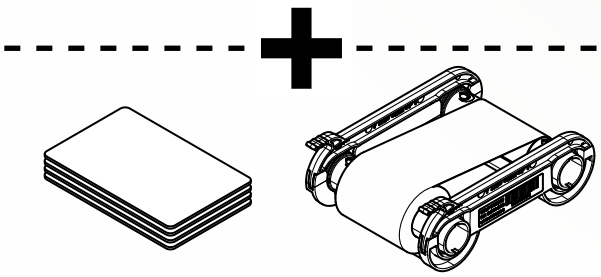

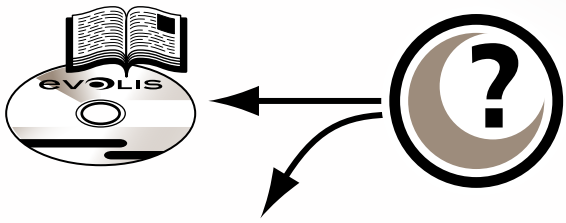

CP010558

www.evolis.com

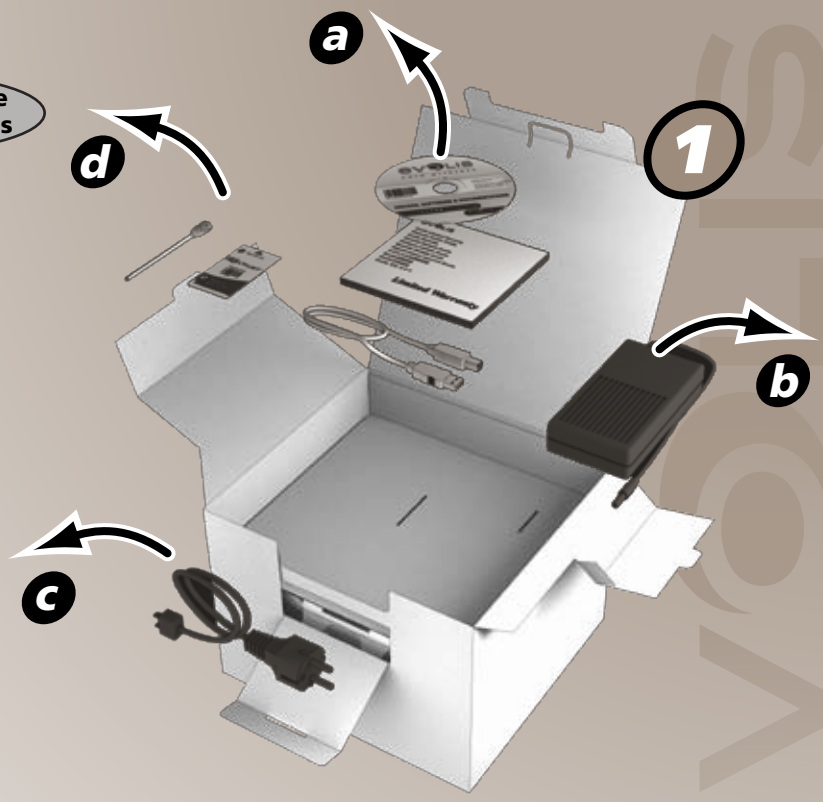

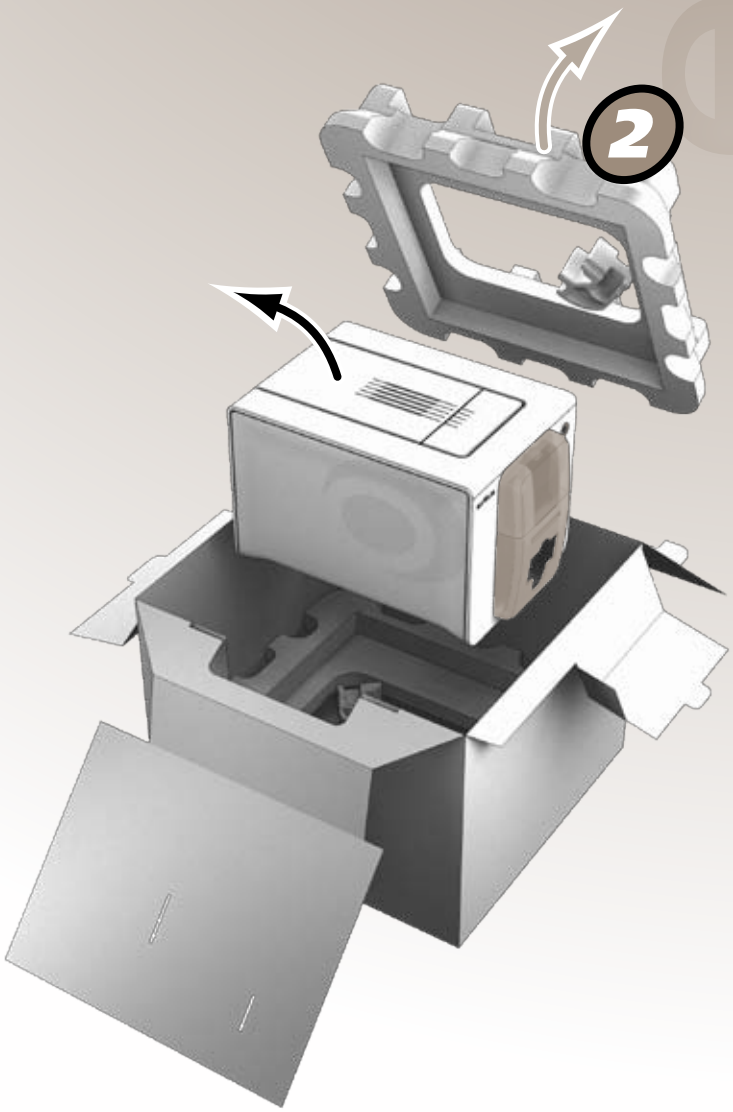

Zenius

1/7

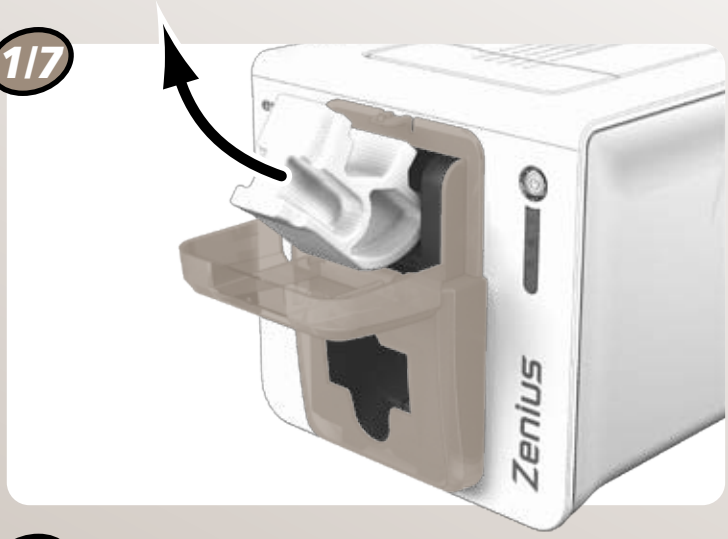

2/7

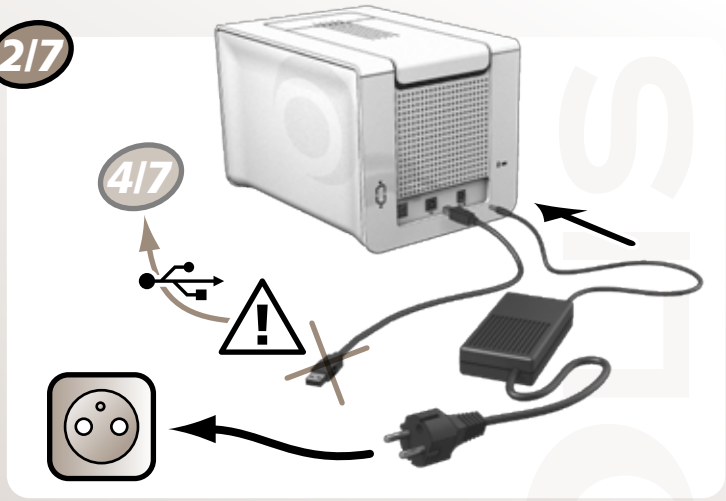

3/7

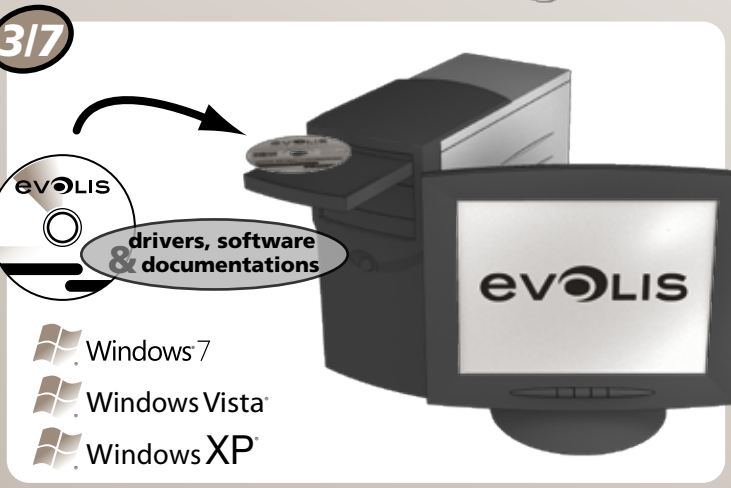

4/7

5/7

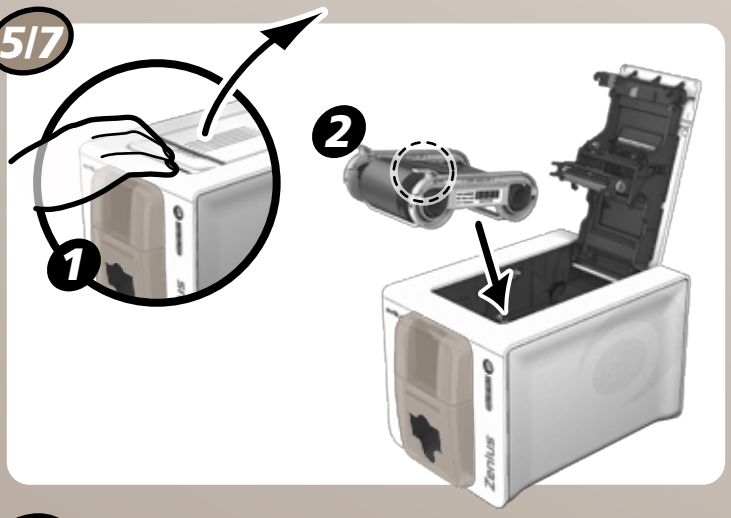

6/7

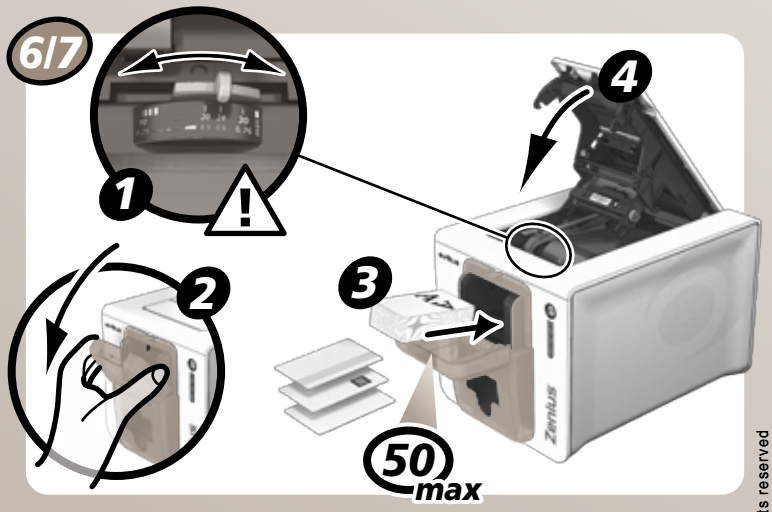

7/7

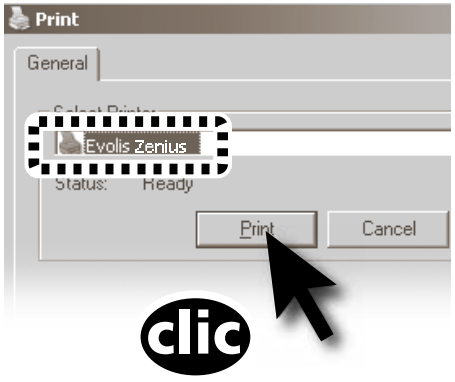

CP010558 Rev. B0 • © 2011 Evolis Card Printer - All rights reserved